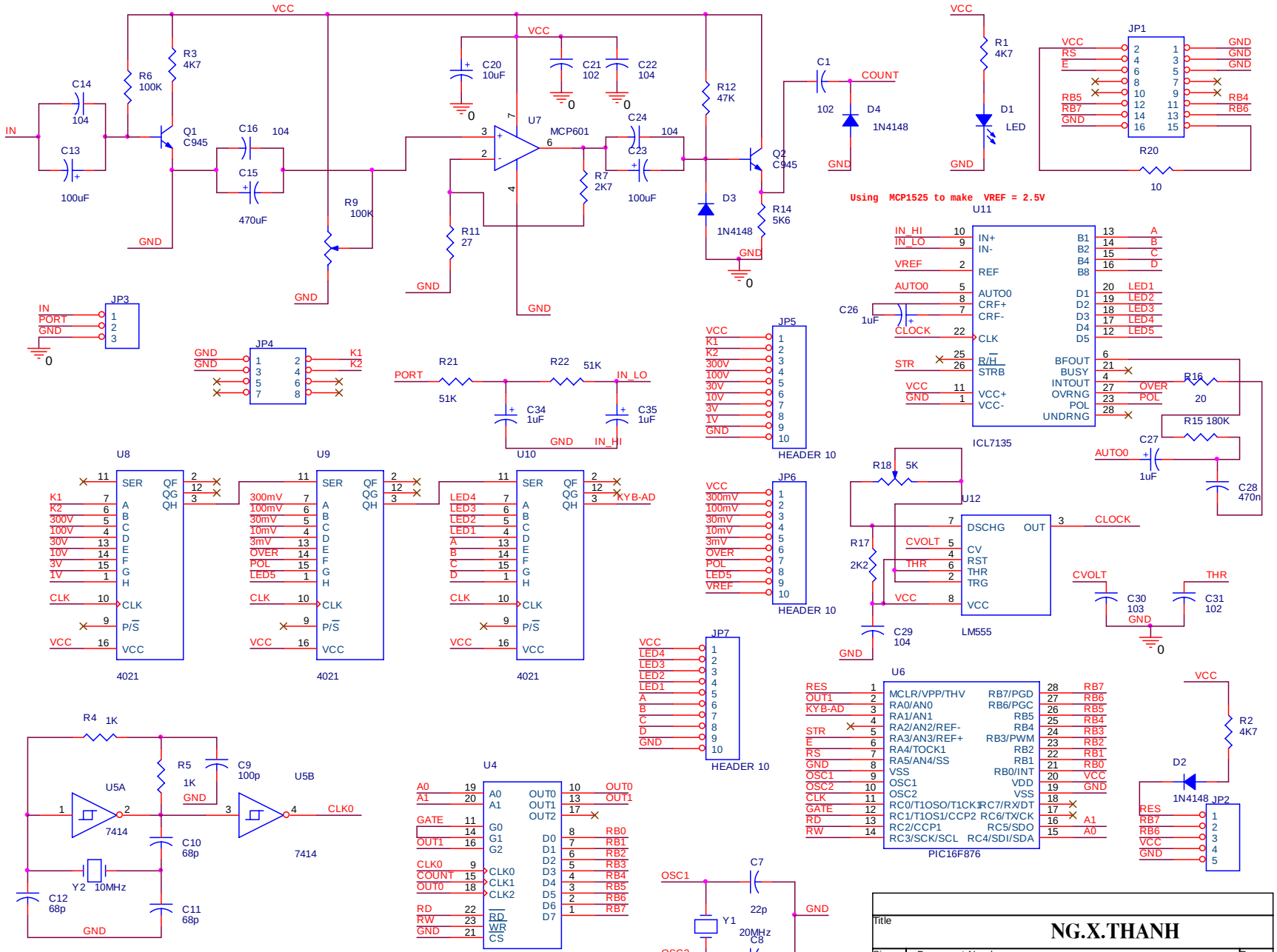
VCC
IN
C14
104
C13
100uF
R6
100K
R3
4K7
Q1
C945
C16
104
C15
470uF
GND
R9
100K
C20
10uF
C21
102
C22
104
U7
MCP601
C24
104
C23
100uF
R7
2K7
R11
27
R12
47K
D3
1N4148
Q2
C945
R14
5K6
C1
102
COUNT
D4
1N4148
R1
4K7
D1
LED
JP1
RS
E
RB5
RB7
RB4
RB6
R20
10
Using MCP1525 to make VREF = 2.5V
U11
IN_HI
IN_LO
VREF
AUTO0
C26
1uF
CLOCK
STR
IN+
IN-
REF
CRF+
CRF-
CLK
R/H
STRB
VCC+
VCC-
B1
B2
B4
B8
D1
D2
D3
D4
D5
BFOUT
BUSY
INTOUT
OVRNG
POL
UNDRNG
LED1
LED2
LED3
LED4
LED5
OVER
ICL7135
R16
20
R15 180K
C27
1uF
C28
470n
JP3
PORT
JP4
K1
K2
R21
51K
R22
51K
C34
1uF
C35
1uF
U10
JP5
300V
100V
30V
10V
3V
1V
HEADER 10
JP6
300mV
100mV
30mV
10mV
3mV
OVER
POL
LED5
VREF
R18
5K
U12
DSCHG
OUT
CVOLT
THR
TRG
R17
2K2
C29
104
LM555
C30
103
C31
102
U8
U9
U4
SER
QF
QG
QH
A
B
C
D
E
F
G
H
CLK
P/S
VCC
4021
KYB-AD
A0
A1
GATE
OUT1
CLK0
COUNT
OUT0
RD
RW
G0
G1
G2
CLK1
CLK2
WR
CS
OUT2
D0
D1
D2
D3
D4
D5
D6
D7
8253
JP7
U6
MCLR/VPP/THV
RA0/AN0
RA1/AN1
RA2/AN2/REF-
RA3/AN3/REF+
RA4/TOCK1
RA5/AN4/SS
VSS
OSC1
OSC2
RC0/T1OSO/T1CK1
RC1/T1OS1/CCP2
RC2/CCP1
RC3/SCK/SCL
RB7/PGD
RB6/PGC
RB5
RB4
RB3/PWM
RB2
RB1
RB0/INT
VDD
RC7/RXDT
RC6/TX/CK
RC5/SDO
RC4/SDI/SDA
PIC16F876
R2
4K7
D2
1N4148
JP2
R4
1K
R5
1K
C9
100p
U5A
7414
U5B
CLK0
C10
68p
Y2
10MHz
C12
68p
C11
68p
C7
22p
Y1
20MHz
C8
22p
Title
NG.X.THANH
Size
Custom
Document Number
<Doc>
Rev
Date:
Wednesday, January 19, 2005
Sheet
1
of
1